Loading Dock Supply LLC

P.O. Box 15, Ashley
Oh 43003

: 800-741-1258
: 866-709-2802
: Sales@loadingdocksupply.com
: www.Loadingdocksupply.com

# MODEL: *B4510-18SF*

***Size***

| | |
|---|---|
| Projection | 5-1/8" |
| Height | 12" |

***Length:***

| | |
|---|---|
| -Overall | 20" |
| -Anchor Holes | 18" |
| -Rubber | 14" |
| Angle Size (2) | 1/4"x3"x3"x11-1/2" |
| Slot Angle Size (3) | 1/4"x3"x4"x12" |
| Face Plate Size (1) | 3/8"x12"x14" |

Bolt Heads Are Inscribed
"DURABLE CORP"

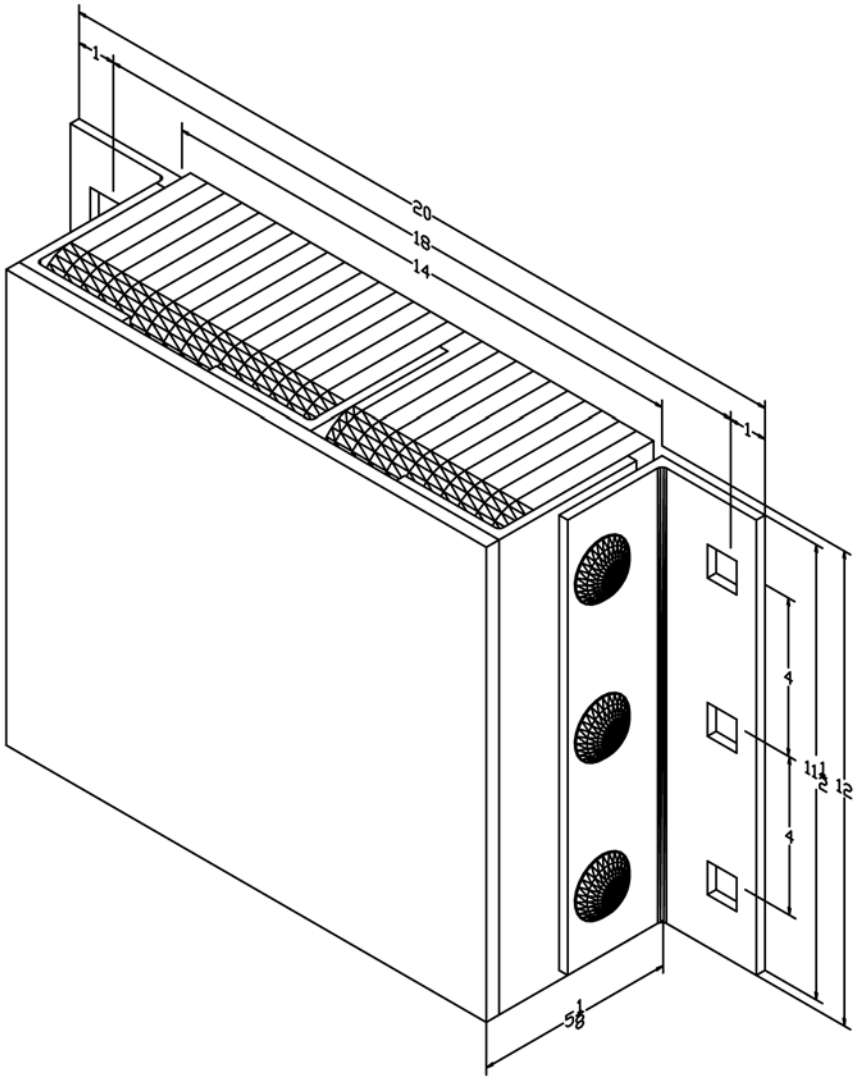


**All measurements are +/- 1/8"**