CAT6 MODULAR PLUG
3 PRONG 50u" GOLD PLATED

Cat5eCableGuy.Com

DESCRIPTION

Category 6, RJ45 Modular Plug,
8P 8C, 50 Micro-inches Gold Plated.

FEATURES

- **50 Micro-Inches Gold Plated 3 prong**
- **For Stranded or Solid Cable**
- **23AWG - 26AWG Wire**
- **Includes Loader Bar**

Electrical

UL Applications	250Volts AC Max, AT 2 Amps
Dielectric Withstanding Voltage	500Volts AC
Insulation Resistance	100m Ω
Termination Resistance	20m Ω Max After Environmental Testing

Mechanical

Cable to Plug Tensile Strenght	20 lbs
Durability	200 Mating Cycles

Material
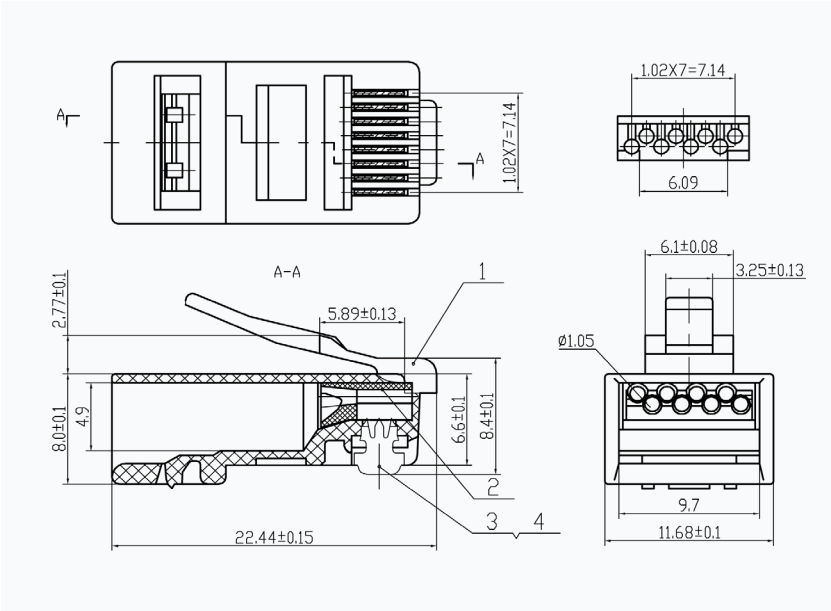
Housing	Polycarbonate
Color	Transparent
Contact Blade	Copper Alloy 3 Prong
Conductor Type	For Stranded or Solid Wire
Conductor Size	For 23AWG - 26AWG
Gold Plating	50u"